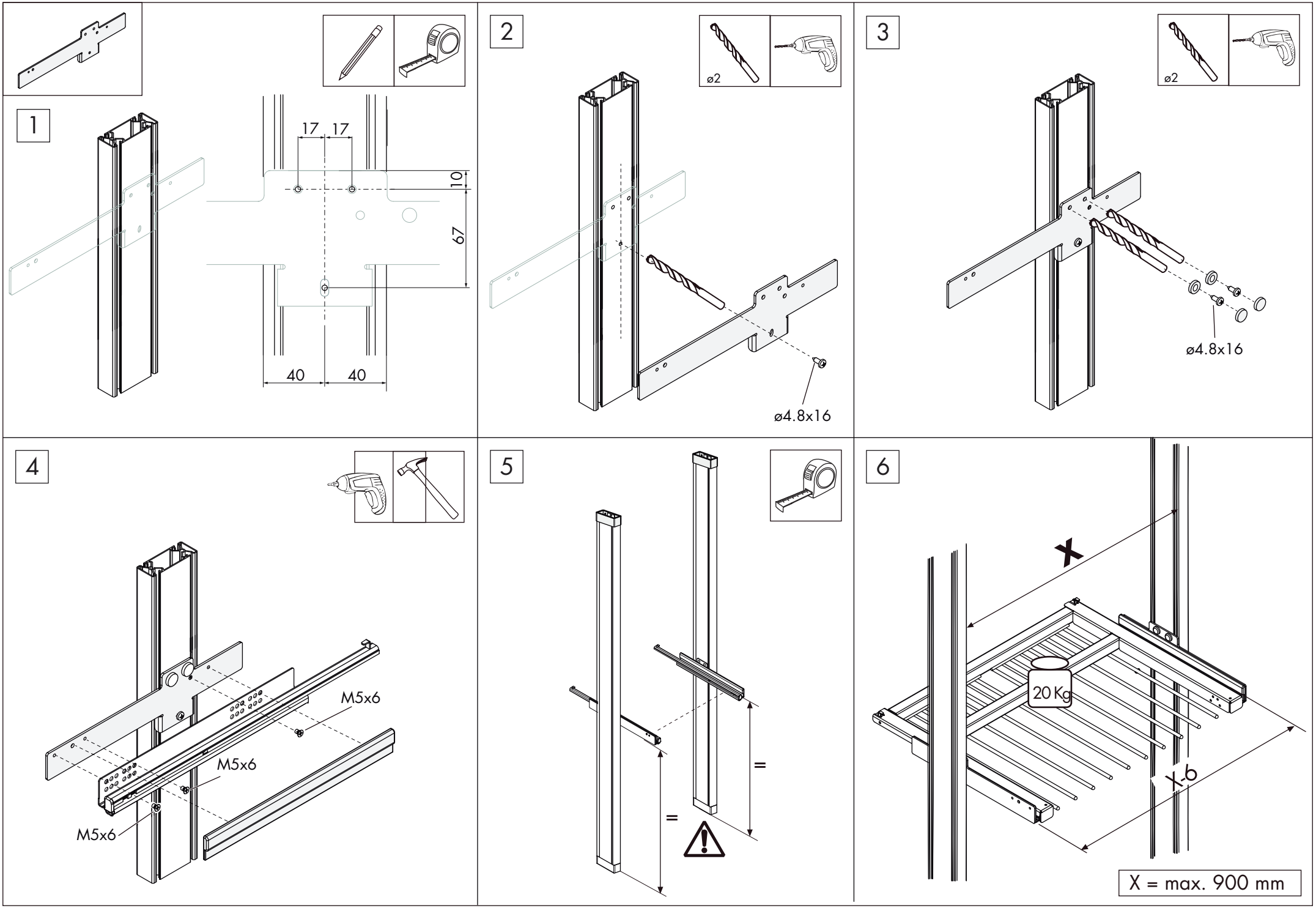
1
17
17
10
67
40
40
2
ø2
ø4.8x16
3
ø2
ø4.8x16
4
M5x6
M5x6
M5x6
5
=
=
6
X
20 Kg
X-6
X = max. 900 mm

IN00315.02